1. ALL RESISTANCE VALUES ARE IN OHMS, 0.1 WATT +/- 5%.
2. ALL CAPACITANCE VALUES ARE IN MICROFARADS.
3. ALL CRYSTALS & OSCILLATOR VALUES ARE IN HERTZ.

| REV | ECN | DESCRIPTION OF REVISION | CK APPD / DATE |
|---|---|---|---|
| 2 | 0019542079 | ENGINEERING RELEASED | 2019-09-04 |

# P2 SCORPIUS BOARD 10L PHDI J417

## BOMS

| PART# | QTY | DESCRIPTION | REFERENCE DESIGNATOR(S) | CRITICAL | BOM OPTION |
|---|---|---|---|---|---|
| 051-05188 | 1 | SCHEM,BOARD,SCORPIUS,J417 | SCH1 | CRITICAL | |
| 820-01945 | 1 | PCBF,BOARD,SCORPIUS,J417 | PCB1 | CRITICAL | |
| 117S0156 | 1 | SCORPIUS,J417 | R1331_C | CRITICAL | R1331_ON |
| 117S0156 | 2 | SCORPIUS,J420 | R1331_C, R1332_C | CRITICAL | R1331&R1332_ON |

| | |
|---|---|
| CKPLUS RULE EXCEPTIONS REQUIRED | |
| SCHEMATIC DEFINED CONSTRAINTS (YES/NO) | NO |

## MECHANICAL PARTS

| PART# | QTY | DESCRIPTION | REFERENCE DESIGNATOR(S) | CRITICAL | BOM OPTION |
|---|---|---|---|---|---|
| 806-14719 | 1 | CAN,MCU,SCORPIUS | MCU CAN | CRITICAL | |
| 806-14720 | 1 | CAN,DRIVER,SCORPIUS | DRIVER CAN | CRITICAL | |

LAST_MODIFICATION=Wed Sep 4 10:42:37 2019


| PAGE | CSA | CONTENTS | SYNC | DATE |
|---|---|---|---|---|
| 1 | 1 | TITLE | | |
| 2 | 2 | CONNECTOR | | |
| 3 | 3 | BUS SENSE | | 09/28/2017 |
| 4 | 4 | MCU | | 09/28/2017 |
| 5 | 5 | ASK DEMOD | 09/28/2017 | |
| 6 | 6 | CHARGE PUMP | 09/28/2017 | |
| 7 | 7 | INVERTER 0 | | 09/28/2017 |
| 8 | 8 | INVERTER 1 | | 09/28/2017 |
| 9 | 9 | COILS | | |
| 10 | 10 | Debug | | |
| 11 | 11 | page11 | | |


DRAWING TITLE
SCHEM,BOARD_10L_PHDI, SCORPIUS,J417

# CONNECTORS

## SCORPIUS HOTBAR

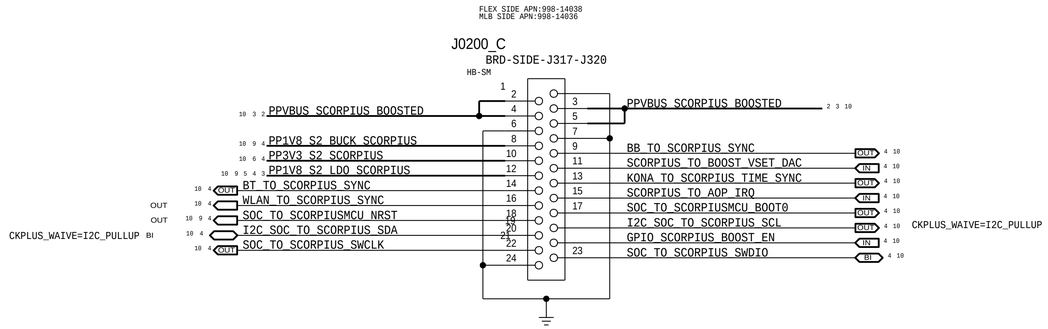


## SLOTS FOR CAN FEET

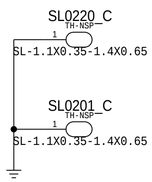


PAGE TITLE
CONNECTOR

# 1.8V

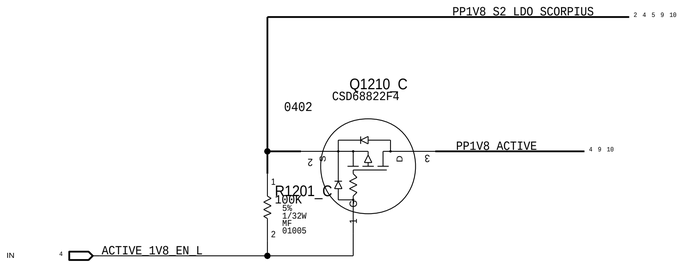


# BUS CURRENT/VOLTAGE SENSE

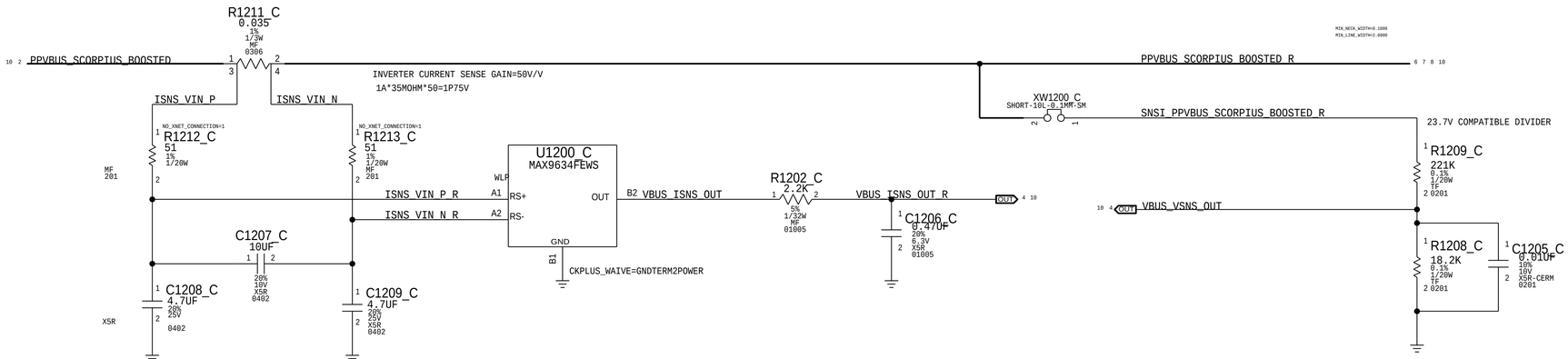


## ALTERNATES

| PART NUMBER | ALTERNATE FOR PART NUMBER | REFERENCE DESIGNATOR(S) | DESCRIPTION | BOM OPTION |
|---|---|---|---|---|
| 107S00105 | 107S00062 | R1211_C | 0.035OHM,RES,1%,0306 | |
| 103S00249 | 103S00250 | R1208_C | 18.2KOHM,RES,0.1%,0201 | |

SYNC_DATE=09/28/2017

PAGE TITLE

BUS SENSE

# MCU

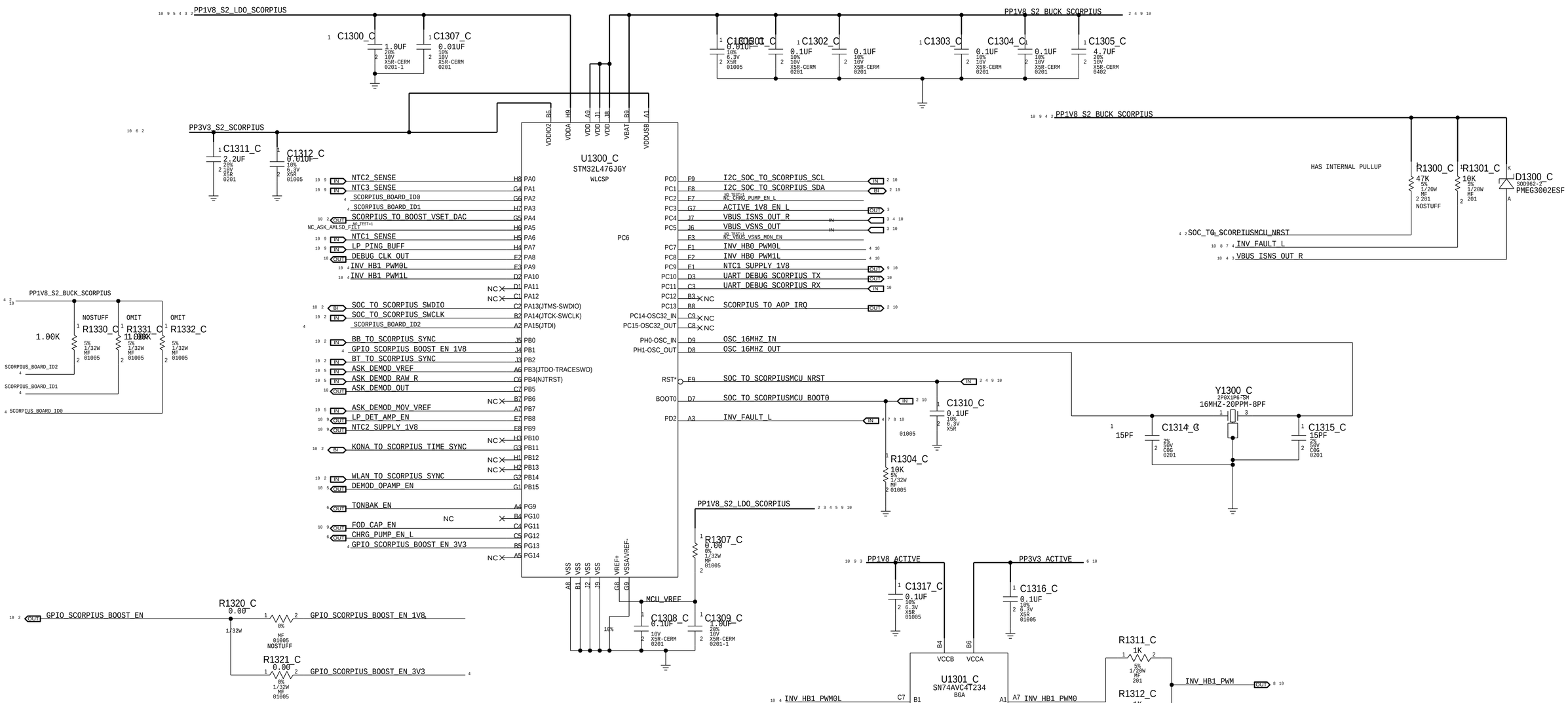


## ALTERNATES

| PART NUMBER | ALTERNATE FOR PART NUMBER | REFERENCE DESIGNATOR(S) | DESCRIPTION | BOM OPTION |
|---|---|---|---|---|
| 132S0683 | 132S00154 | C1310_C,C1316_C,C1317_C | 0.1UF,CAP,10%,6.3V,1005 | |
| 138S0945 | 138S0706 | C1300_C, C1309_C | 1UF,CAP,20%,10V,201 | |
| 138S0739 | 138S0706 | C1300_C, C1309_C | 1UF,CAP,20%,10V,201 | |
| 138S1103 | 138S0719 | C1305_C | 4.7UF,CAP,20%,10V,402 | |
| 197S00174 | 197S00172 | Y1300_C | 16MHZ,XTAL, 2P0,1P6 | |
| 131S0831 | 131S0730 | C1314_C, C1315_C | 15PF,CAP,5%,50V,201 | |

SYNC_DATE=09/28/2017

PAGE TITLE

MCU

# ASK DEMOD

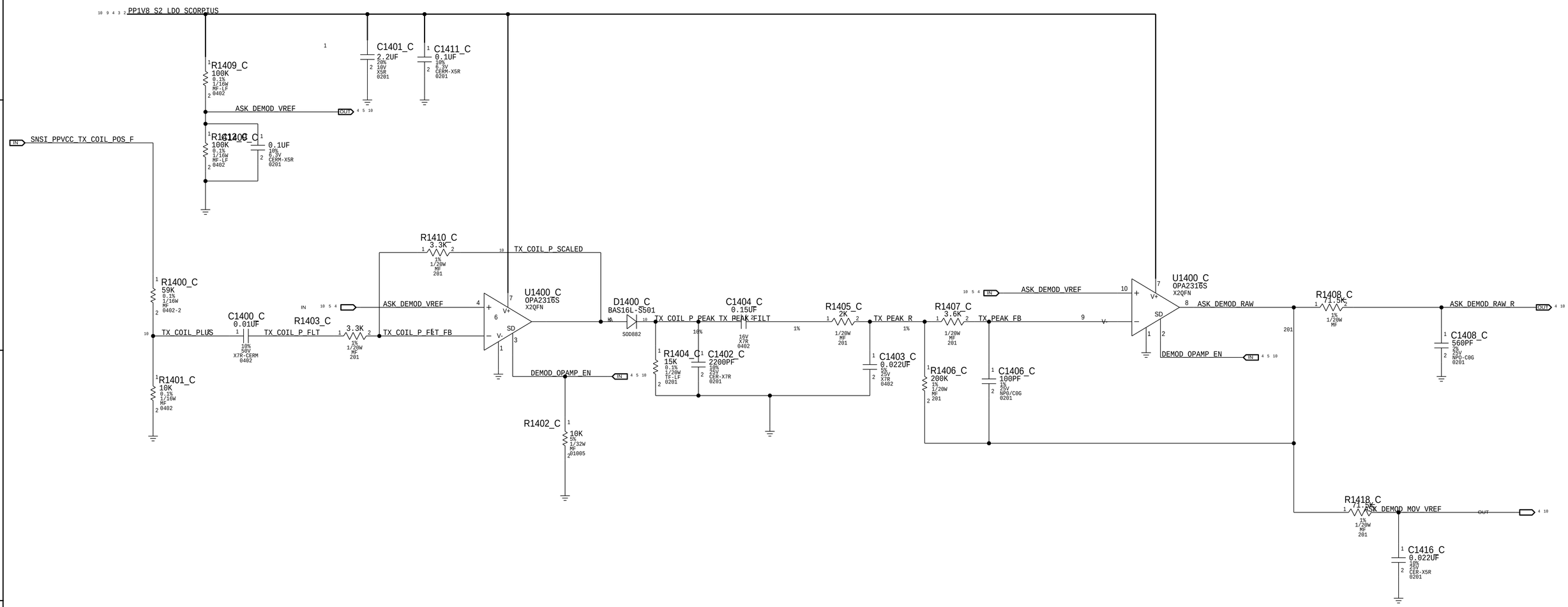


## ALTERNATES

| PART NUMBER | ALTERNATE FOR PART NUMBER | REFERENCE DESIGNATOR(S) | DESCRIPTION | BOM OPTION |
|---|---|---|---|---|
| 103S00147 | 103S0283 | R1409_C,R1412_C | 100K,RES,0.1%,0402 | |

SYNC_DATE=09/28/2017

PAGE TITLE

ASK DEMOD

# 5V CHARGE PUMP

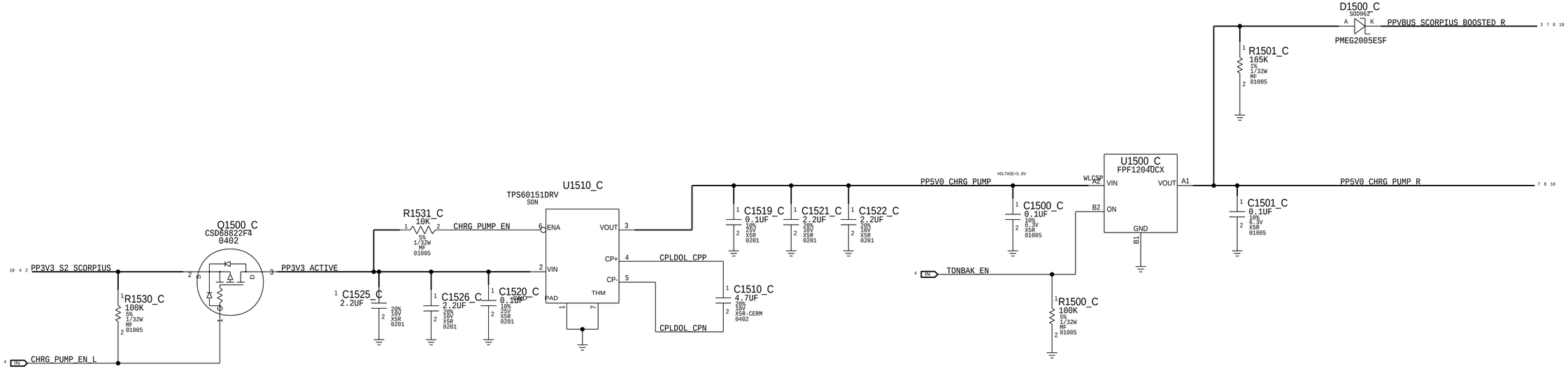


## ALTERNATES

| PART NUMBER | ALTERNATE FOR PART NUMBER | REFERENCE DESIGNATOR(S) | DESCRIPTION | BOM OPTION |
|---|---|---|---|---|
| 138S1103 | 138S0719 | C1510_C | 4.7UF,CAP,20%,X5R,0402 | |
| 132S0683 | 132S00154 | C1500_C,C1501_C | 0.1UF,CAP,10%,X5R,01005 | |
| 353S01007 | 353S01039 | U1500_C | IC,LOAD SW, 5V | |

SYNC_DATE=09/28/2017

PAGE TITLE

CHARGE PUMP

# HALF BRIDGE 0

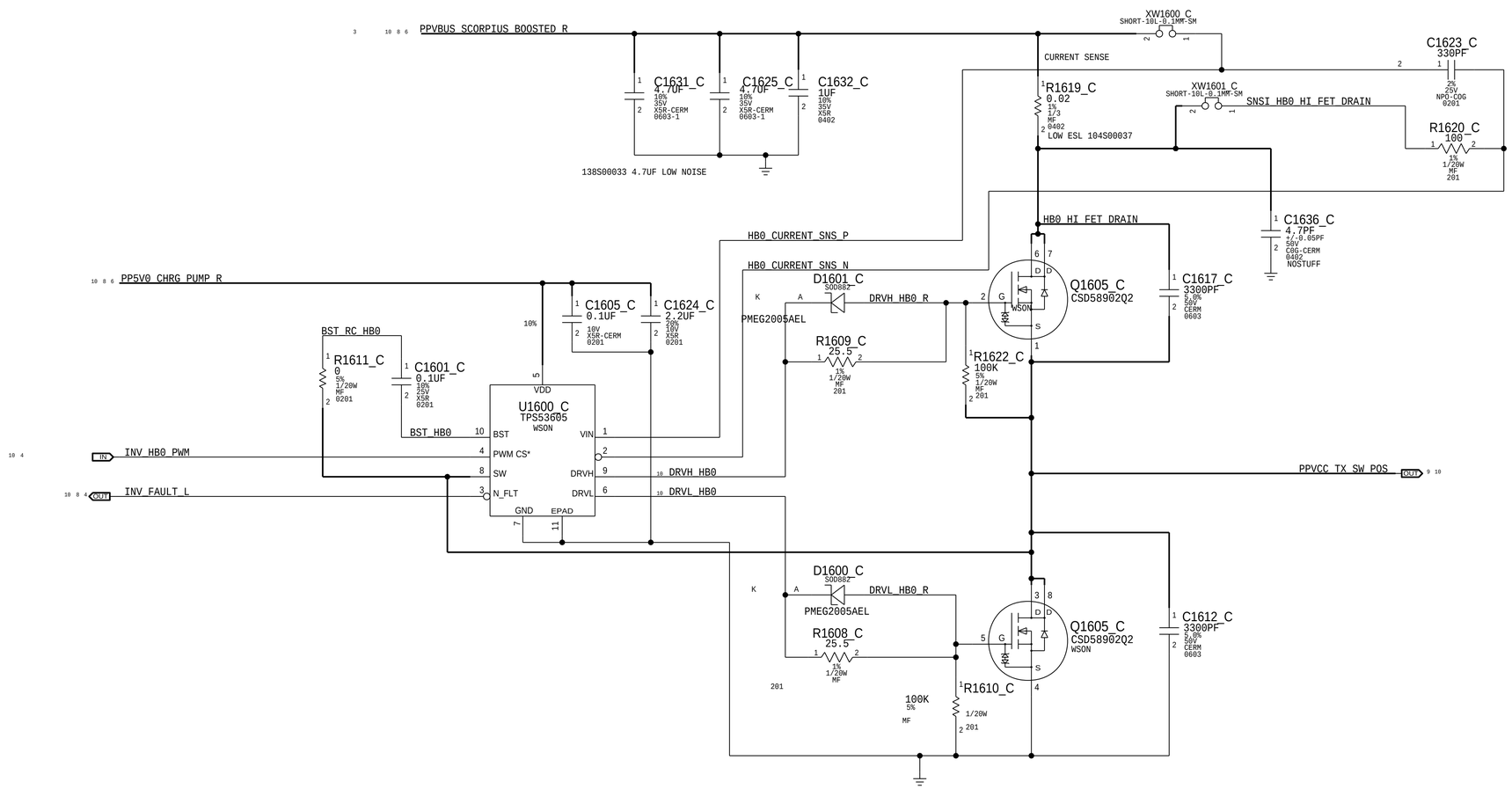


## ALTERNATES

| PART NUMBER | ALTERNATE FOR PART NUMBER | REFERENCE DESIGNATOR(S) | DESCRIPTION | BOM OPTION |
|---|---|---|---|---|
| 131S00313 | 131S0824 | C1623_C | 330PF,CAP,2%,C0G,0201 | |
| 371S00156 | 371S0541 | D1600_C,D1601_C | DIODE,500MA,20V,SOD882 | |

SYNC_DATE=09/28/2017

PAGE TITLE

INVERTER 0

# HALF BRIDGE 1

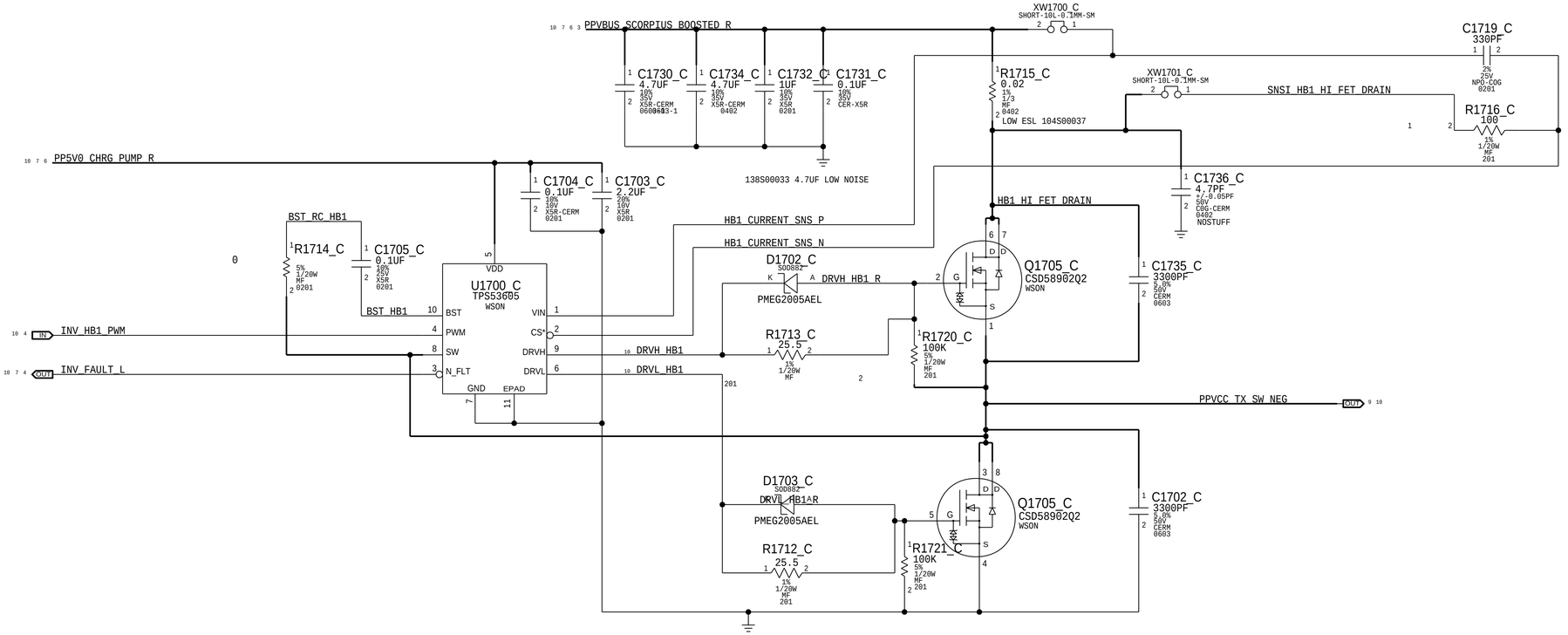


## ALTERNATES

| PART NUMBER | ALTERNATE FOR PART NUMBER | REFERENCE DESIGNATOR(S) | DESCRIPTION | BOM OPTION |
|---|---|---|---|---|
| 131S00313 | 131S0824 | C1719_C | 330PF,CAP,2%,C0G,0201 | |
| 371S00156 | 371S0541 | D1702_C,D1703_C | DIODE,500MA,20V,SOD882 | |

SYNC_DATE=09/28/2017

PAGE TITLE

INVERTER 1

# COIL PADS

131S00206 33NF 0805 H0.65MM
3W DESIGN REQUIRES 198NF

VOLTAGE=14V
PPVCC_TX_SW_POS

C1815_C 0.033UF 2% 50V C0G 0805-1
C1820_C 0.033UF 2% 50V C0G 0805-1
C1826_C 0.033UF 2% 50V C0G 0805-1
C1804_C 0.033UF 2% 50V C0G 0805-1
C1807_C 0.033UF 2% 50V C0G 0805-1
C1809_C 0.033UF 2% 50V C0G 0805-1

XW1800_C SHORT-10L-0.1MM-SM

SNSI_PPVCC_TX_COIL_POS_F

C1803_C 100PF 2% 50V C0G 0201-1

FL1800_C 120OHM-25%-1.8A-0.0750HM 0402 OMIT_TABLE

VOLTAGE=14V
PPVCC_TX_COIL_POS_F

VOLTAGE=14V
PPVCC_TX_COIL_POS

C1800_C 100PF 2% 50V C0G-CERM 0603 NOSTUFF

C1802_C 180PF 2% 50V NP0-C0G 0201

J1800_C CFX3102-B221E F-ST-SM

FL1801_C 120OHM-25%-1.8A-0.0750HM 0402 OMIT_TABLE

VOLTAGE=14V
PPVCC_TX_COIL_NEG

C1808_C 180PF 2% 50V NP0-C0G 0201

VOLTAGE=14V
PPVCC_TX_SW_NEG

# PING DETECT

PP1V8_ACTIVE

R1808_C 20K 1% 1/32W MF 01005

PP1V8_S2_BUCK_SCORPIUS

D1800_C SOD962-2 PMEG3002ESF

LP_PING_FILT

R1807_C 0 5% 1/20W MF 0201

LP_PING

C1801_C 1NF 2% 50 V C0G 0402

C1812_C 2200PF 2% 50V C0G 0402

C1806_C 680PF 5% 50V NPO-COG-CERM 0402 NOSTUFF

R1809_C 20K 1% 1/32W MF 01005

D1801_C SOD962-2 PMEG3002ESF

FOD_CAP_DRAIN

R1824_C 470K 5% 1/32W MF 01005

Q1800_C DMN32DZLFB4 DFN1006H4-3

FOD_CAP_EN

R1803_C 10K 5% 1/32W MF 01005

# COIL TEMP SENSE

NTC1_SUPPLY_1V8

R1810_C 10K 1% 1/32W MF 01005

NTC1_SENSE
NTC BESIDE BRIDGE

C1813_C 0.010UF 10% 6.3V X5R 01005

R1806_C 10KOHM-1%-0.31MA 0201

NTC2_SUPPLY_1V8

R1820_C 10K 1% 1/32W MF 01005

NTC2_SENSE
NTC BESIDE CTX

C1830_C 0.010UF 10% 6.3V X5R 01005

R1821_C 10KOHM-1%-0.31MA 0201

PP1V8_S2_LDO_SCORPIUS

R1822_C 10K 1% 1/32W MF 01005

NTC3_SENSE
NTC BESIDE COIL TERMINAL

C1831_C 0.010UF 10% 6.3V X5R 01005

R1823_C 10KOHM-1%-0.31MA 0201

# OTP HW THROTTLE

PP1V8_S2_LDO_SCORPIUS

R1812_C 0.00 0% 1/32W MF 01005 NOSTUFF

NTC3_OTP_VREF

R1813_C 2.55K 1% 1/20W MF 201 NOSTUFF

C1822_C 0.1UF 10% 6.3V X5R 01005 NOSTUFF

U1801_C MAX40002ANS+ WLP
VCC/REF
IN
OUT
GND
NOSTUFF

SOC_TO_SCORPIUSMCU_NRST

R1815_C 100 5% 1/32W MF 01005 NOSTUFF

NTC3_SENSE

R1814_C 0.00 0% 1/32W MF 01005 NOSTUFF

NTC3_SENSE_R

C1823_C 0.1UF 10% 6.3V X5R 01005 NOSTUFF

SCORPIUS_OTP_THROTTLE_L

# LP PING BUFF

PP1V8_S2_LDO_SCORPIUS

C1805_C 0.1UF 10% 6.3V CERM-X5R 0201

R1800_C 0 5% 1/20W MF 0201

LP_AMP_FB

U1800_C MAX44260 UDFN-HF

LP_PING_FILT

LP_PING_BUFF

LP_DET_AMP_EN

R1804_C 10K 5% 1/32W MF 01005

# ALTERNATES

| PART NUMBER | ALTERNATE FOR PART NUMBER | REFERENCE DESIGNATOR(S) | DESCRIPTION | BOM OPTION |
|---|---|---|---|---|
| 131S0731 | 131S00239 | C1803_C | 100PF,2%,C0G,0201 | |
| 107S0150 | 107S0208 | R1806_C,R1821_C,R1823_C | 10K,RES,1%,NTC,0201 | |
| 376S00282 | 376S1128 | Q1800_C | NFET,30V,0.3A | |
| 132S0683 | 132S00154 | C1822_C | 0.1UF,10%,X5R,01005 | |
| 116S00007 | 116S00006 | FL1800_C,FL1801_C | 0.1UF,10%,X5R,01005 | |
| 353S01486 | 353S01676 | U1801_C | IC,NONINV,COMP | |
| 131S00299 | 131S00118 | C1802_C,C1808_C | 180PF,2%,50V,0201 | |

# OMIT TABLE

| PART# | QTY | DESCRIPTION | REFERENCE DESIGNATOR(S) | CRITICAL | BOM OPTION |
|---|---|---|---|---|---|
| 116S00006 | 1 | RES, 0, 0402 | FL1800_C, FL1801_C | CRITICAL | |

PAGE TITLE
COILS

# DEBUG

## VOLTAGE

TP2000_C — TP-P35SMP4 — VOLTAGE=1.8V — PP1V8_S2_LDO_SCORPIUS — 2 3 4 5 9 10

TP2001_C — TP-P35SMP4 — VOLTAGE=1.8V — PP1V8_ACTIVE — 3 4 9

TP2002_C — TP-P35SMP4 — VOLTAGE=3.3V — PP3V3_ACTIVE — 4 6

TP2003_C — TP-P35SMP4 — VOLTAGE=15V — PPVBUS_SCORPIUS_BOOSTED — 2 3

TP2005_C — TP-P35SMP4 — VOLTAGE=1.8V — PP1V8_S2_BUCK_SCORPIUS — 2 4 9

TP2006_C — TP-P35SMP4 — VOLTAGE=3.6V — PP3V3_S2_SCORPIUS — 2 4 6

TP2007_C — TP-P35SMP4 — VOLTAGE=5V — PP5V0_CHRG_PUMP_R — 6 7 8

TP2039_C — TP-P35SMP4 — VOLTAGE=15V — PPVBUS_SCORPIUS_BOOSTED_R — 3 6 7 8

TP2040_C — TP-P35SMP4 — VOLTAGE=14V — PPVCC_TX_SW_POS — 7 9

TP2041_C — TP-P35SMP4 — VOLTAGE=14V — PPVCC_TX_SW_NEG — 8 9

TP2055_C — TP-P35SMP4 — VOLTAGE=1.8V — PP1V8_S2_LDO_SCORPIUS — 2 3 4 5 9 10

## PROGRAMMING

TP2017_C — TP-P35SMP4 — SOC_TO_SCORPIUSMCU_BOOT0 — 2 4

TP2025_C — TP-P35SMP4 — SOC_TO_SCORPIUS_SWDIO — 2 4

TP2026_C — TP-P35SMP4 — SOC_TO_SCORPIUS_SWCLK — 2 4

TP2027_C — TP-P35SMP4 — SOC_TO_SCORPIUSMCU_NRST — 2 4 9

TP2014_C — TP-P35SMP4 — UART_DEBUG_SCORPIUS_TX — 4

TP2004_C — TP-P35SMP4 — UART_DEBUG_SCORPIUS_RX — 4

TP2036_C — TP-P35SMP4 — I2C_SOC_TO_SCORPIUS_SDA — 2 4

TP2019_C — TP-P35SMP4 — I2C_SOC_TO_SCORPIUS_SCL — 2 4

TP2034_C — TP-P35SMP4 — GND

## TEST POINTS

TP2011_C — TP-P35SMP4 — DEBUG_CLK_OUT — 4

TP2012_C — TP-P35SMP4 — FOD_CAP_EN — 4 9

TP2013_C — TP-P35SMP4 — WLAN_TO_SCORPIUS_SYNC — 2 4

TP2015_C — TP-P35SMP4 — VBUS_ISNS_OUT_R — 3 4

TP2016_C — TP-P35SMP4 — VBUS_VSNS_OUT — 3 4

TP2035_C — TP-P35SMP4 — GPIO_SCORPIUS_BOOST_EN — 2 4

TP2045_C — TP-P35SMP4 — SCORPIUS_TO_BOOST_VSET_DAC — 2 4

TP2046_C — TP-P35SMP4 — SCORPIUS_TO_AOP_IRQ — 2 4

TP2047_C — TP-P35SMP4 — BB_TO_SCORPIUS_SYNC — 2 4

TP2048_C — TP-P35SMP4 — BT_TO_SCORPIUS_SYNC — 2 4

TP2032_C — TP-P35SMP4 — NTC1_SUPPLY_1V8 — 4 9

TP2033_C — TP-P35SMP4 — NTC1_SENSE — 4 9

TP2044_C — TP-P35SMP4 — NTC2_SUPPLY_1V8 — 4 9

TP2043_C — TP-P35SMP4 — NTC2_SENSE — 4 9

TP2022_C — TP-P35SMP4 — KONA_TO_SCORPIUS_TIME_SYNC — 2 4

TP2057_C — TP-P35SMP4 — NTC3_SENSE — 4 9

TP2070_C — TP-P35SMP4 — INV_HB0_PWM0L — 4

TP2071_C — TP-P35SMP4 — INV_HB0_PWM1L — 4

TP2072_C — TP-P35SMP4 — INV_HB1_PWM0L — 4

TP2073_C — TP-P35SMP4 — INV_HB1_PWM1L — 4

TP2023_C — TP-P35SMP4 — GND

## ASK/LPP

TP2024_C — TP-P35SMP4 — LP_PING_FILT — 9

TP2028_C — TP-P35SMP4 — TX_COIL_PLUS — 5

TP2029_C — TP-P35SMP4 — ASK_DEMOD_VREF — 4 5

TP2030_C — TP-P35SMP4 — TX_COIL_P_SCALED — 5

TP2031_C — TP-P35SMP4 — TX_COIL_P_PEAK — 5

TP2020_C — TP-P35SMP4 — ASK_DEMOD_OUT — 4

TP2018_C — TP-P35SMP4 — LP_PING_BUFF — 4 9

TP2037_C — TP-P35SMP4 — LP_DET_AMP_EN — 4 9

TP2038_C — TP-P35SMP4 — ASK_DEMOD_RAW_R — 4 5

TP2042_C — TP-P35SMP4 — DEMOD_OPAMP_EN — 4 5

TP2054_C — TP-P35SMP4 — SNSI_PPVCC_TX_COIL_POS_F — 5 9

TP2056_C — TP-P35SMP4 — ASK_DEMOD_MOV_VREF — 4 5

TP2059_C — TP-P35SMP4 — GND

## BRIDGE

TP2008_C — TP-P35SMP4 — INV_HB1_PWM — 4 8

TP2009_C — TP-P35SMP4 — INV_HB0_PWM — 4 7

TP2010_C — TP-P35SMP4 — INV_FAULT_L — 4 7 8

TP2049_C — TP-P35SMP4 — DRVH_HB0 — 7

TP2050_C — TP-P35SMP4 — DRVL_HB0 — 7

TP2051_C — TP-P35SMP4 — DRVH_HB1 — 8

TP2052_C — TP-P35SMP4 — DRVL_HB1 — 8

TP2053_C — TP-P35SMP4 — GND

PAGE TITLE: Debug

PAGE TITLE

?